Japan's First Dual-Fuel Diesel-Electric Propulsion Liquefied Natural Gas (LNG) Carrier

HAJIME NUMAGUCHI TOSHIFUMI SATOH
TOSHINORI ISHIDA SHOICHI MATSUMOTO
KAZUHIRO HINO TAKESHI IWASAKI

1. Introduction

A steam-turbine propulsion plant using dual-fuel boilers has long been used as the propulsion system for liquefied natural gas (LNG) carriers. In recent years, however, increasing numbers of LNG shipowners have required the use of diesel engines, traditionally used in ships other than LNG carriers, for the propulsion plant due to the lack of crews skilled in handling steam plants containing high-pressure boilers and the potential energy savings that can be realized because of the soaring price of crude oil. Mitsubishi Heavy Industries, Ltd. (MHI) has designed and constructed an electric propulsion carrier for MISC Berhad that makes use of dual-fuel diesel engines. This paper describes our dual-fuel diesel–electric propulsion LNG carrier, which is the first ship of its kind constructed in Japan.

2. Dual-fuel LNG carrier overview and propulsion plant

The dual-fuel ship is a 157,000 m^3 membrane LNG carrier built for MISC Berhad. Its main specifications are listed in **Table 1**. Based on the shipowner's requirements at the time of construction, MHI adopted a propulsion system using dual-fuel diesel engines, which consume less fuel than steam-turbine propulsion.

Table 1 Main specifications of the dual-fuel LNG carrier

Ship class		BV	Cargo tank volume	(m^3)	157 720
Overall length	(m)	294.60	Propulsion motor power	(kW)	12 900 × 2 sets
Length between perpendiculars	(m)	281.60	Generator power	(kW)	11 400 × 3 sets
Width	(m)	46.50			5 700 × 1 set
Depth	(m)	25.80	Maximum power	(kW × min^{-1})	24 750 × 78
Calculated draft	(m)	11.15	Sea speed	(kt)	19.5
Gross tonnage	(t)	107 633			

The propulsion plant consists of four generators, two propulsion electric motors, a reduction gear, and a screw propeller for propulsion. The redundancy of the propulsion plant was enhanced by adopting several generator engines, propulsion electric motors, and independent power supply systems (**Figure 1**).

The generator engine consists of four medium-speed dual-fuel diesel engines (12V50DF × 3, 6L50DF × 1) manufactured by Wärtsilä. This generator engine can be operated by switching between MDO-mode, which uses only diesel oil as fuel, and GAS-mode, which uses gas as a main fuel and diesel oil as a pilot fuel. Also, this generator engine can use the boil-off gas generated in the LNG tank as fuel.

The propulsion electric motor (PEM) consists of two high-speed motors (rated at 640 min^{-1}) manufactured by ABB. The output shafts of the PEM are connected to a reduction gear and activate the screw propeller for propulsion. Each PEM has an independent power supply system and can be individually operated.

The arrangement of the engine room is shown in **Figure 2**. The generator engines are placed separately into left and right engine rooms, and a bridge wall separates the rooms for safety reasons.

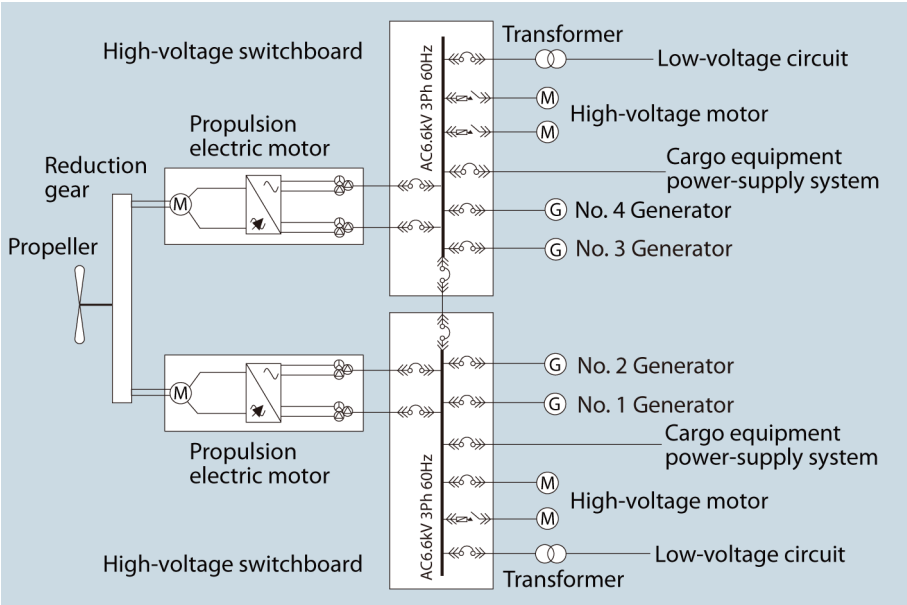

Figure 1 Generation-power supply system

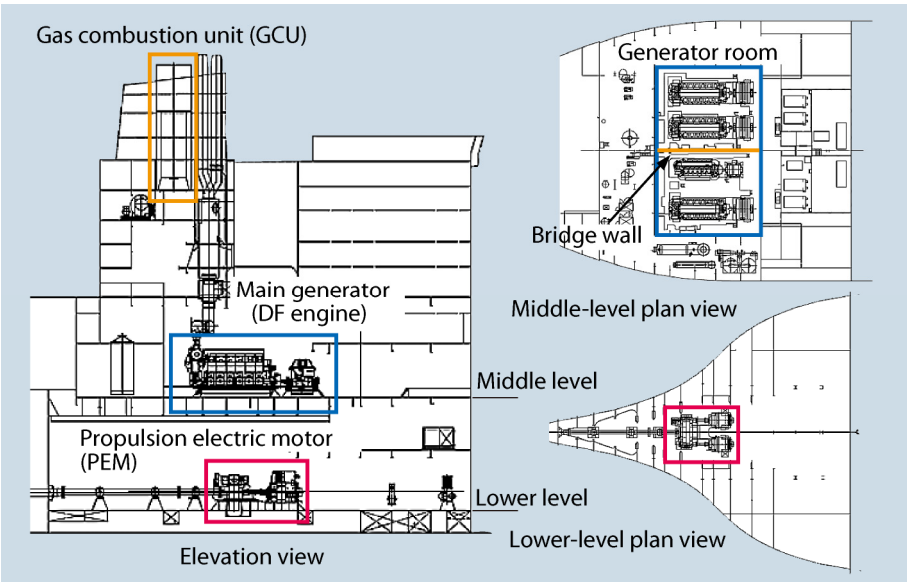

Figure 2 Engine-room layout plan

3. Gas supply system

3.1. System outline

The gas supply system of this carrier is shown in **Figure 3**.

The fuel gases for the generator engines consist of natural boil-off (NBO) gas spontaneously generated in the LNG tank and forced boil-off (FBO) gas obtained by vaporizing the LNG. The fuel gases are pressurized by gas compressors and supplied to the generator engines. The required gas pressure for the generator engines is 0.55 MPa. MHI adopted two-stage pressurization for the gas compressors. To obtain a sufficient compression ratio, the gas compressors are required to maintain the suction temperature of less than –100°C. A precooler is installed on the NBO side to lower the temperature by spraying LNG. Non-gasification ingredients in the LNG sprayed by the precooler are separated by mist separators, collected in a drain tank, and returned to the LNG tank.

FBO is the gas obtained when LNG in the tank is transferred to a steam-heated forcing vaporizer by a fuel gas pump. LNG sprinkling sprayers are installed on the exit side of the steam-heated forcing vaporizer to maintain the FBO gas temperature at less than –100°C. Two stages are used for the sprayer to ensure good cooling performance. The remaining non-gasification ingredients in the gas after spraying the LNG are separated by the mist separator dedicated for the FBO gas and returned to the LNG tank.

The temperature at the gas compressor exits rises to nearly 100°C, and could cause the temperature of the gas at the inlet to the generator engines to exceed the required range of 0 to 60°C. To lower the temperature, after-coolers are installed at the sides of gas compressor exits to spray the LNG. The after-coolers also control the quantity of LNG sprayed to balance the required gas quantity in the field, since the quantity of fuel gas runs short when only NBO gas is used while an overabundance of fuel gas exists if the forcing vaporizer is used. To prepare for the case when the NBO gas yield surpasses the required fuel quantity, a gas combustion unit (GCU) is installed to dispose of the extra NBO gas.

To ensure that the gas temperature is maintained at a value greater than 0°C (*e.g.*, when supplying NBO gas to the GCU only using the internal pressure of the LNG tank without driving the gas compressors), gas heaters are installed downstream of the after-coolers and used to heat the LNG tank temperature to a normal temperature.

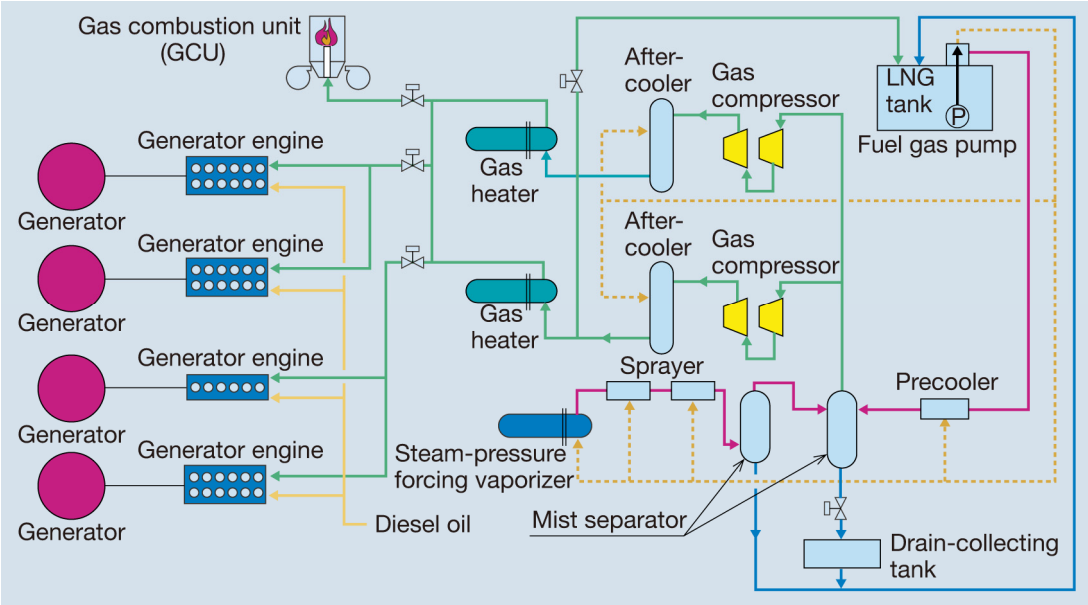

Figure 3 Gas supply system

3.2. Gas supply

The two-speed gas compressors are started at low speed. After the inlet temperature of the gas compressors falls below –100°C due to the precooler, the gas compressors are shifted to high speed, increasing the discharge pressure up to 0.55 MPa. The dual-fuel engines cannot dispose of the discharged gas from the gas compressors in this process due to insufficient pressure. The gas discharged during this process is usually burned by the GCU, but in our new carrier, piping is installed to return the gas to the LNG tank to avoid useless gas consumption. This piping is equipped with a control valve. When the gas consumption rapidly decreases due to the fuel-mode switching of the dual-fuel diesel engines, this control valve returns the gas from the gas compressor exits to the LNG tank. Thus, the control valve also controls the gas so as not to affect the gas supply system, including the gas compressors.

3.3. Fuel tank pressure control

The gas supply system not only transfers the fuel gas to the diesel engines, but also plays an important role controlling the pressure in the LNG tank. Three functions are available to control the pressure: an automatic start/stop of the GCU, flow control of the forcing vaporizer, and spray quantity control of the after-coolers.

4. Trial results

4.1. Sea trial

The measured fuel oil consumption rate (FOCR) of this carrier during its sea trial and FOCR of an identical horsepower steam-turbine propulsion plant are shown in **Figure 4**. The propeller shaft horsepower FOCR indicated approximately 20% energy savings compared to the steam-turbine propulsion plant.

4.2. Gas test

The measured stability of the gas supply system is shown in **Figure 5**. When three dual-fuel diesel engines were in operation in GAS-mode, the variation in the gas supply pressure was controlled to approximately 8%, even if the loading on the engines was drastically lowered by approximately 40%. This rapid loading change on the engines did not affect the GAS-mode operation of the diesel engines, and consequently, the stability of the gas supply system was demonstrated to be adequate.

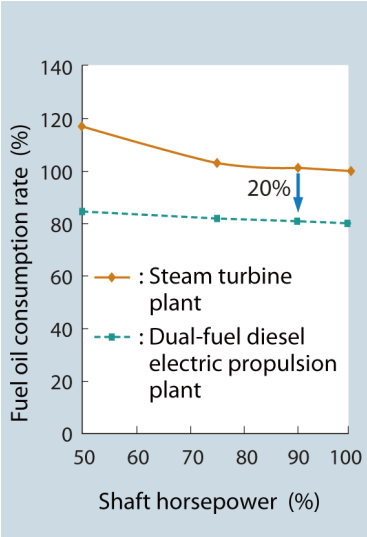

Figure 4 Comparison of fuel oil consumption rate

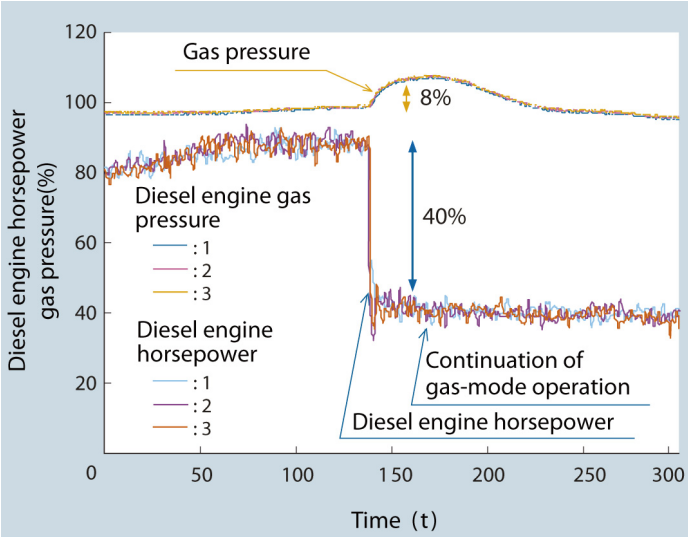

Figure 5 Stability of the gas supply system

5. Conclusions

The first dual-fuel diesel–electric propulsion LNG carrier in Japan finished its gas tests in November 2008, meeting its design objectives. Its delivery procedure was completed in January 2009. The advantages of the diesel–electric propulsion plant over a steam-turbine power plant are mixed with regard to maintenance, such as parts replacement during periodic inspections and flexibility in the pressure control of the LNG tank. However, since MHI is now able to deliver an electric propulsion plant that makes use of dual-fuel diesel engines, in addition to a conventional steam-turbine plant for LNG carriers, the company is in a better position to respond to broad-ranging customer requirements.

Authors

Hajime Numaguchi
Manager,
Ship Designing Department,
Nagasaki Shipyard & Machinery Works

Toshifumi Satoh
Manager,
Ship Designing Department,
Nagasaki Shipyard & Machinery Works

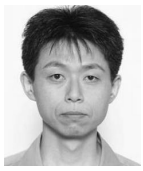

Toshinori Ishida
Manager,
Ship Designing Department,
Nagasaki Shipyard & Machinery Works

Shoichi Matsumoto
Manager,
Ship Designing Department,
Nagasaki Shipyard & Machinery Works

Kazuhiro Hino
Koyagi Construction Department,
Nagasaki Shipyard & Machinery Works

Takeshi Iwasaki
Ship Designing Department,
Nagasaki Shipyard & Machinery Works