Development of Multi-temperature Controllability for Transport Refrigeration Systems

KATSUMI HACHISUKA*1 SHINTARO HOSHI*2

The temperature-controlled transportation industry requires multi-temperature refrigeration units that can keep cargoes at different controlled temperatures simultaneously during transport. Compared with office/home air conditioners, multi-control systems have a low level of sophistication, partially because of the low demand for them. With increasing demand, however, Mitsubishi Heavy Industries has developed a control system for multi-temperature refrigeration units for practical use. This control system is improved in terms of temperature controllability and energy efficiency. Details are provided below.

1. Introduction

Transportation by cars and other vehicles is responsible for approximately 20% of the CO_2 emissions in Japan. The truck transport industry has been urged to reduce CO_2 emissions by improving the efficiency of physical distribution. In response to recent soaring prices of crude oil and requests to reduce the cost of physical distribution, the transport industry has encouraged efforts to increase the load-to-truck ratio to improve the physical distribution efficiency. Naturally, for low-temperature physical distribution, multi-temperature refrigeration units that can keep cargoes at different controlled temperatures simultaneously are being used more frequently. In a typical multiple air-conditioning system, the set temperature for each room is very similar. In contrast, in a transport refrigeration system, the set temperatures may vary considerably, and temperature controllability and energy efficiency have to be considered. The technical challenges we face are significant.

In response to these market needs, we have developed multi-temperature refrigeration units that can control the temperature in up to three compartments independently over the range -35 to +30°C. This paper reports the features of our multi-temperature refrigeration control system.

2. Improved Temperature Controllability using Cooling Capacity Distribution Control

In our multi-temperature refrigeration equipment, the outdoor unit is connected to two or three indoor units, as shown in **Figure 1**.

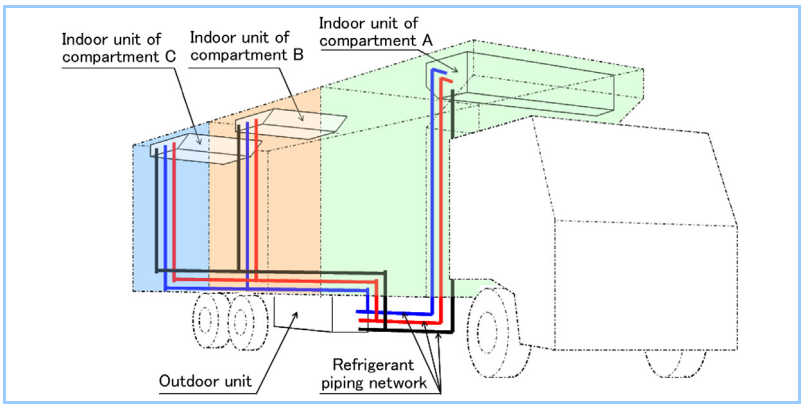

Figure 1 Typical installation of multi-temperature refrigeration unit
Example of multi-temperature refrigeration unit installation. The trailer is divided into three compartments along its length.

*1 Engineering Manager, Transportation Refrigeration Department, Air-Conditioning & Refrigeration Systems Headquarters
*2 Transportation Refrigeration Department, Air-Conditioning & Refrigeration Systems Headquarters

In conventional multi-temperature refrigeration equipment, each indoor unit is generally equipped with a thermostatic expansion valve that functions as a throttling device for pressure reduction. Each thermostatic expansion valve works independently, and the distribution of refrigerant to each indoor unit at any instant is determined by the current conditions. This makes it difficult to correlate the refrigerating capacity of the indoor unit and the heat load of the corresponding compartment. As a result, multi-temperature cooling operation with a considerable gap between the two extremes of the set temperatures may cause inadequate refrigeration in a compartment with a low set temperature so that the temperature in that compartment is not lowered to the desired level.

To deal with this, we developed an original system for "cooling capacity distribution control" in which the amount of refrigerant distributed to each indoor unit is dynamically controlled. In this system, each indoor unit is equipped with an electric expansion valve to control the amount of refrigerant distributed. The refrigerant cycle is illustrated in **Figure 2**.

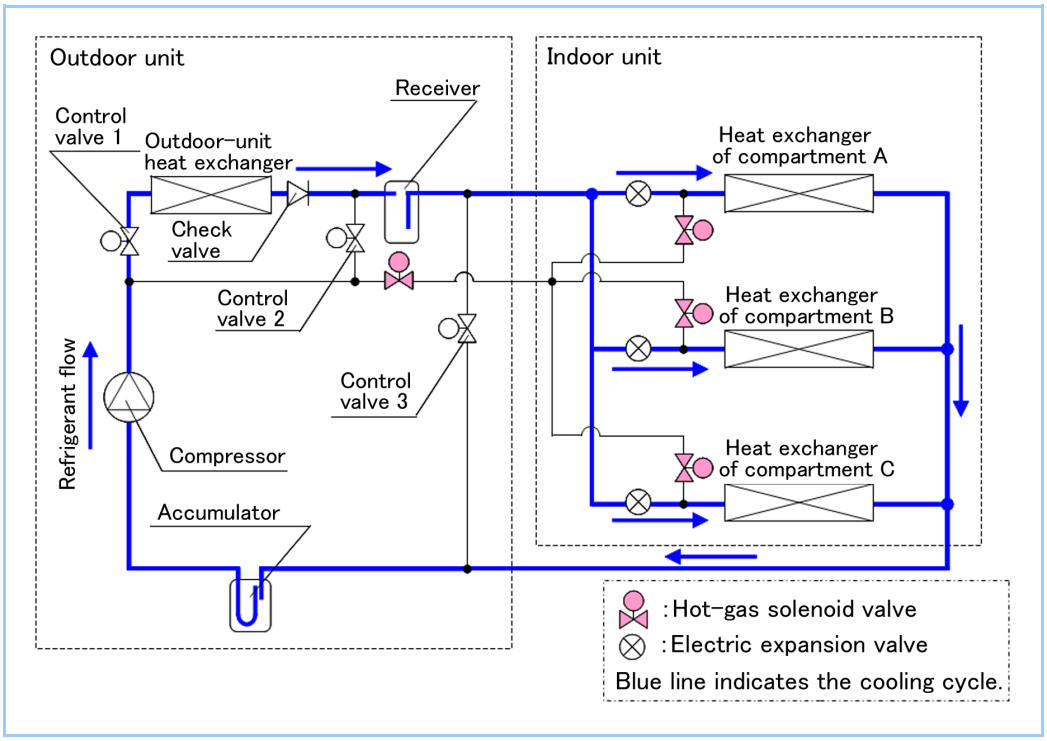

Figure 2 Refrigerant cycle of multi-temperature refrigeration unit (cooling cycle)
The refrigerant cycle of a multi-temperature refrigeration unit with three compartments is shown.

To refrigerate the air in a compartment, refrigerant that is colder than the air in the compartment needs to be passed into the indoor-unit heat exchanger. Suppose that cooling is operated in two compartments with set temperatures of -30°C and +10°C. The refrigerant temperatures necessary for heat exchange in the two compartments differ considerably. With cooling capacity distribution control, the electric expansion valves in all of the operating indoor units are controlled in a coordinated manner, adjusting the refrigerant temperatures so that heat can be exchanged in the compartment with the lowest air temperature.

Consequently, control for performance assurance is prioritized. The opening of the electric expansion valves is then controlled to adjust the distribution of refrigerant according to the refrigerating capacity necessary for each compartment. This is done while maintaining the refrigerant temperature, as described previously, using control parameters such as the difference between the set temperature and the actual indoor temperature. With this control method, it is possible to correlate the refrigerating capacity of an indoor unit and the heat load of the corresponding compartment, while maintaining the refrigerating capacity in the compartment with the lowest set temperature. Stable temperature control is possible even when there is a considerable difference between the two set temperatures.

Figure 3 shows the data obtained in a test of actual units in which the outside air temperature was 25°C and the set temperatures for the three compartments were 10°C, 0°C, and -20°C.

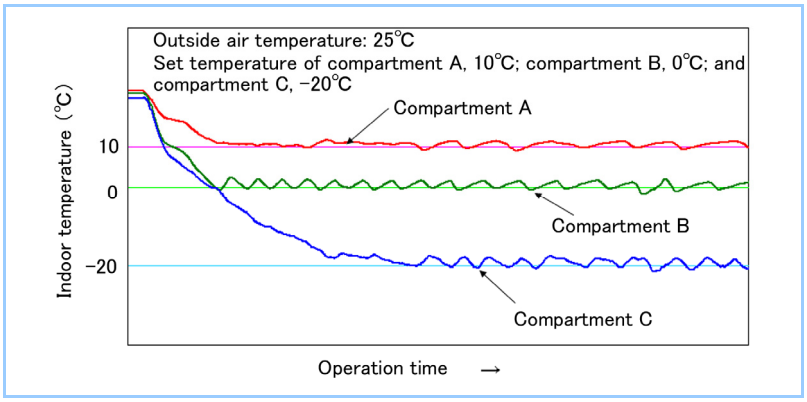

Figure 3 Simultaneous cooling operation in three compartments at different set temperatures using our new multi- temperature refrigeration unit
The temperature in the compartment with the low set temperature is well-controlled, even if the on/off switch is used repeatedly for temperature control in the compartment with the high set temperature.

3. Improved Energy Efficiency with Synchronized Thermostat Off Control

When the on/off switch of the indoor unit is used repeatedly to maintain the desired temperature and more than one indoor unit operates simultaneously, the compressor can be stopped only when all of the compartments reach the desired temperatures simultaneously. As shown in **Figure 4**, repeated independent use of the on/off switch for temperature control in each indoor unit reduces the chance of all of the indoor units being off. Thus, the compressor is more likely to be operating, which does not improve the energy efficiency.

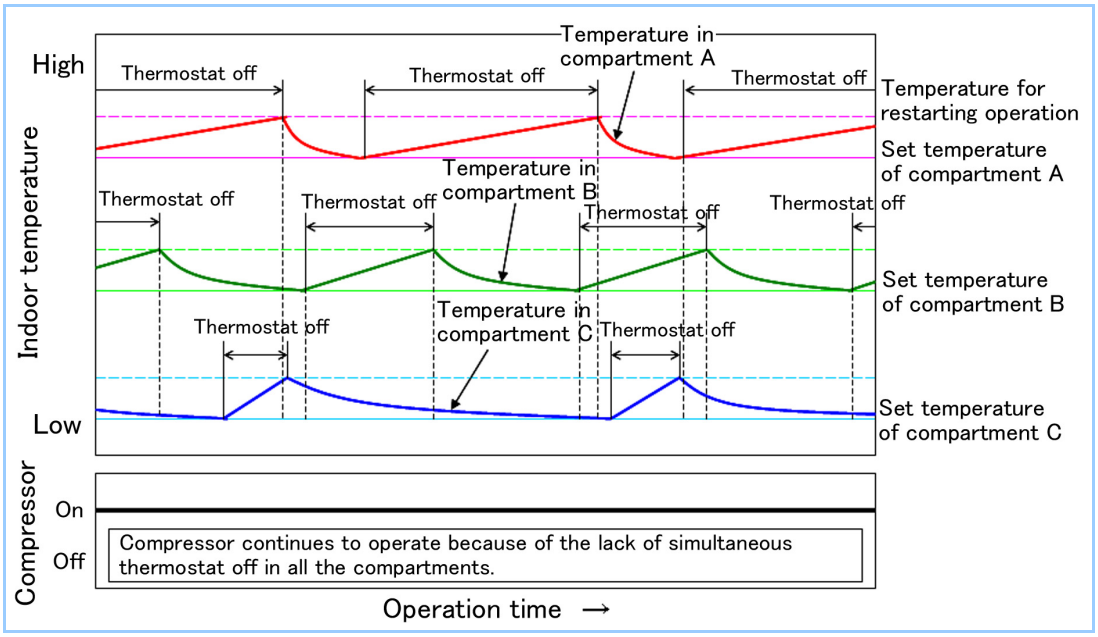

Figure 4 Conventional operation of a multi-temperature refrigeration unit
The compressor cannot be switched off unless all the compartments reach their set temperatures simultaneously.

With our "synchronized thermostat off control," shown in **Figure 5**, the indoor unit in a compartment that reaches the set temperature before other compartments is switched off (thermostat off) but will continue to be given a small capacity for refrigeration and maintain the temperature of the compartment at the desired level. The timing for thermostat off is then synchronized in all of the indoor units. Using this approach, we have succeeded in decreasing the on-time ratio of the compressor by 3–8%.

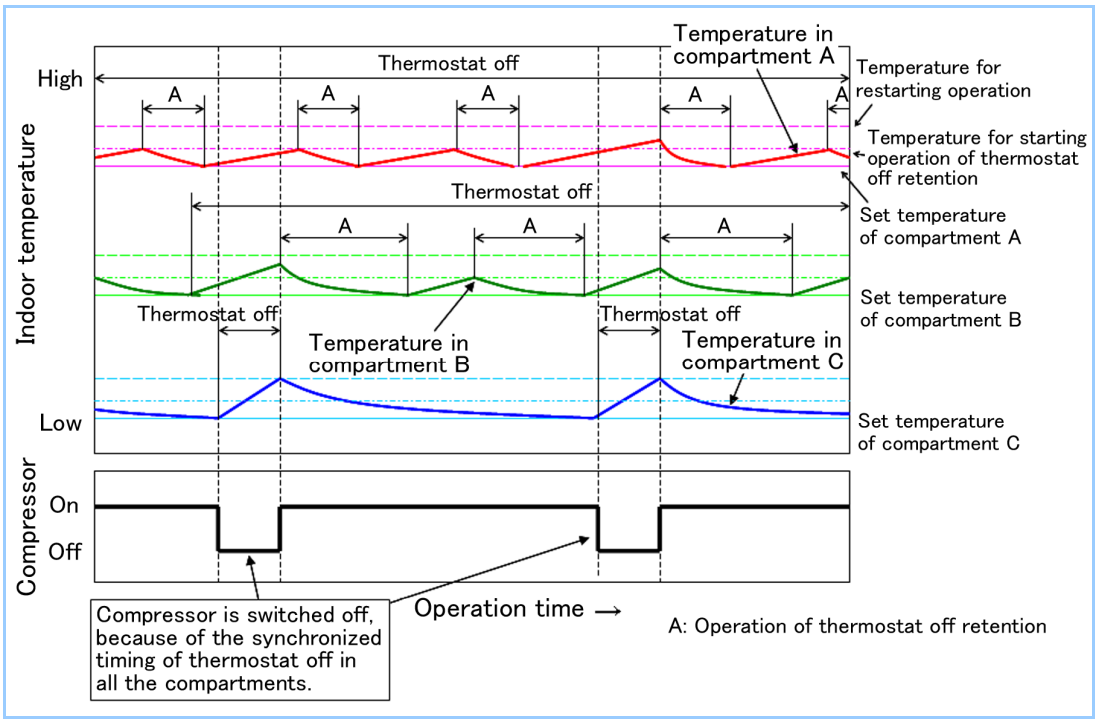

Figure 5 Operation with the synchronized thermostat off control
The temperature of a compartment that reaches its set temperature before other compartments is maintained at the set temperature. This enables the timing for thermostat off to be synchronized in all compartments to reduce the on-time ratio of the compressor.

4. Flexibility in Combinations of Indoor Units with Different Capacities

A multi-temperature refrigeration unit can involve many possible combinations of factors, such as the number of compartments, compartment size, and division of the trailer space, as shown in **Figure 6**. We have constructed several indoor units to meet various needs. Depending on the situation, the user may want to use a combination of indoor units with extremely different refrigeration capacities. In this case, if a conventional multi-temperature refrigeration unit with thermostatic expansion valves was used, the indoor unit changeover for the on/off transition may result in a sudden change in state that the thermostatic expansion valve cannot handle, making it difficult to maintain stable operation.

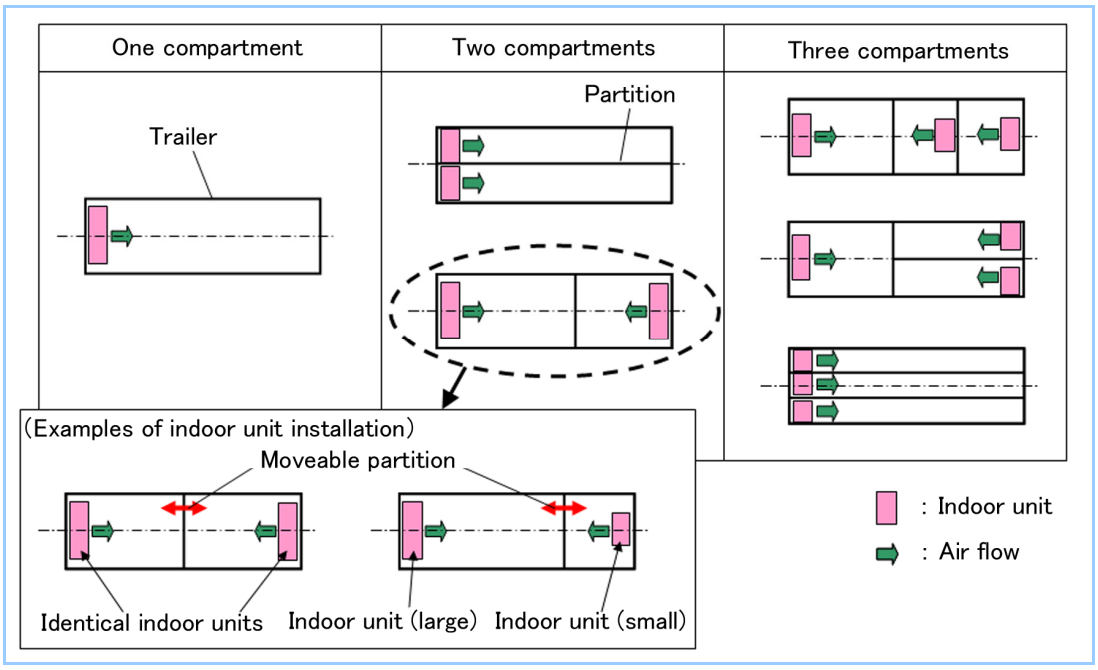

Figure 6 Combination patterns in multi-temperature refrigeration unit
Various combinations may be used according to the compartment size and intended purpose.

We have made it possible to provide stable control even during this changeover by controlling all of the operating electric expansion valves in a coordinated manner, such that the pressure-reducing characteristics of the entire system remain essentially the same. The use of this control has resulted in multi-temperature refrigeration units that can offer flexibility in the combination of indoor units.

5. Operational Stability at High Outside Air Temperatures

Various accessories for pressure adjustment are installed in multi-temperature refrigeration units with thermostatic expansion valves to prevent the equipment from being operated beyond the usage limit of the power load or refrigerant discharge pressure from the compressor when the outside air temperature is high.

In a system that uses electric expansion valves in all compartments, closing the electric expansion valve has the same effect as using various pressure-adjusting accessories, and controls the increase in the power load or discharge pressure from the compressor. Even with a high outside air temperature, we achieved stable low-cost operation in which no discontinuation of unit protection was caused by abnormal high pressure and no operation beyond the power-load limit for use was allowed.

6. Operational Stability at Low Outside Air Temperature

The lower the outside/inside air temperatures or the smaller the size of the indoor unit used for operation, the more the refrigerant pressure in the outdoor or the indoor units decreases during cooling operation. Depending on the situation, the multi-temperature refrigeration equipment may be operated using a single small indoor unit, which may cause the refrigerant pressure in the indoor unit to fall below the use limit when the outside/inside air temperatures are low. Stable operation with a single small indoor unit at low outside/inside air temperatures is enabled by bypassing the heat exchanger of the outdoor unit and adding pressure to the liquid refrigerant between the receiver and electric expansion valve to increase the refrigerant pressure in the outdoor and indoor units.

7. Conclusion

With the increasing importance of improved physical distribution and energy efficiency, we have developed a control system for multi-temperature refrigeration equipment in which all of the indoor units are equipped with electric expansion valves for the first time in the industry. We have also fully exploited the characteristics of these electric expansion valves, which can be set to any degree of opening. This new system allows cargoes with considerably different set temperatures to be transported simultaneously with better temperature controllability than existing systems. The control that reduced the compressor on-time ratio improved the energy efficiency. Stable operation was achieved for a wide range of outside air temperatures and for various combinations of indoor units.

We hope that our multi-temperature refrigeration control system will contribute to improving the efficiency of physical distribution at low temperature, while reducing the environmental burden.

Reference

1. Tanaka, T. et al., Transport Refrigeration System of Multi Temperature Control by Refrigerant Heating which is Suitable for Convenience Store Delivery, Mitsubishi Juko Giho Vol.41 No.2 (2004) pp.106-109